CROWN RF

Crown RF
2005A Industrial Blvd.
Rockwall, TX 75087

972-771-4711
972-771-9499 (fax)
800-225-3429 (toll free)

E-Mail: sales@crownrf.com

Website: www.crownrf.com

Crown P/N: CRS-9700
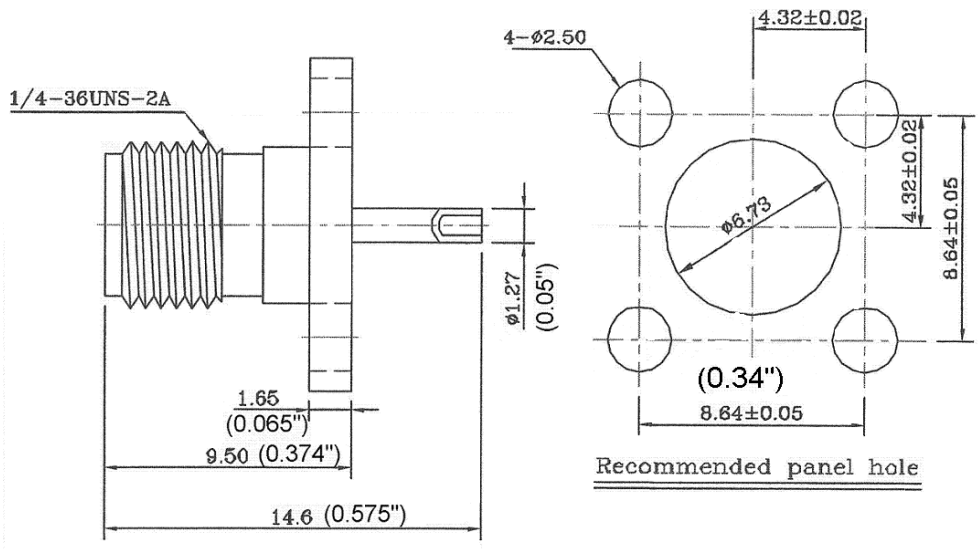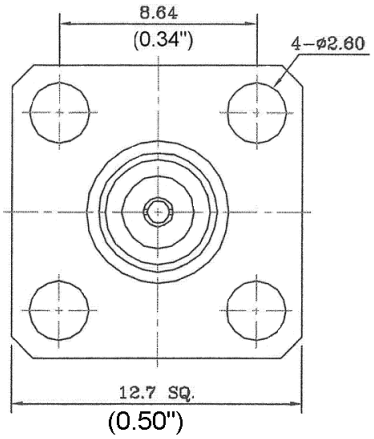
Description:	**SMA (Female) Panel Receptacle**
Body:	**Gold / Brass**
Insulation:	**Teflon**
Contact:	**Gold / Beryllium Copper**